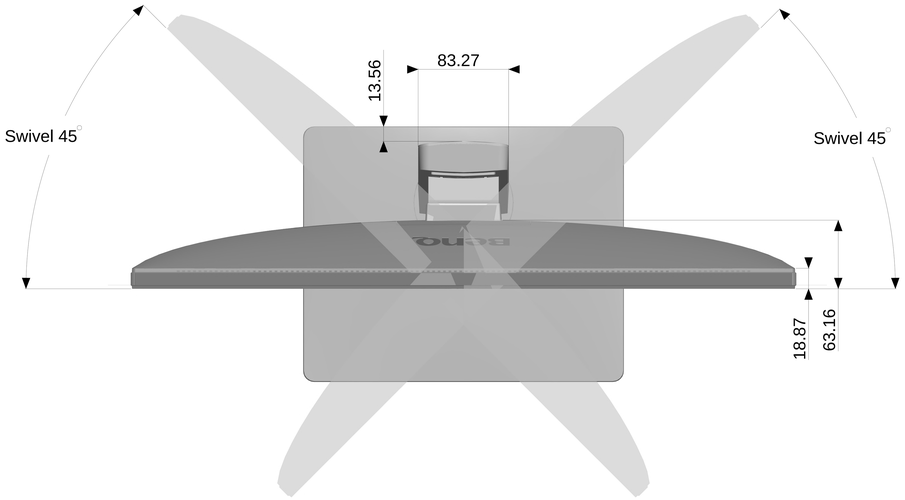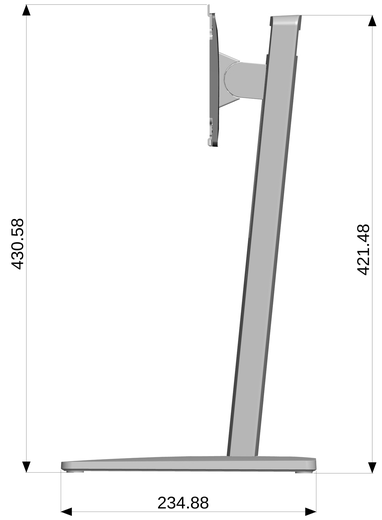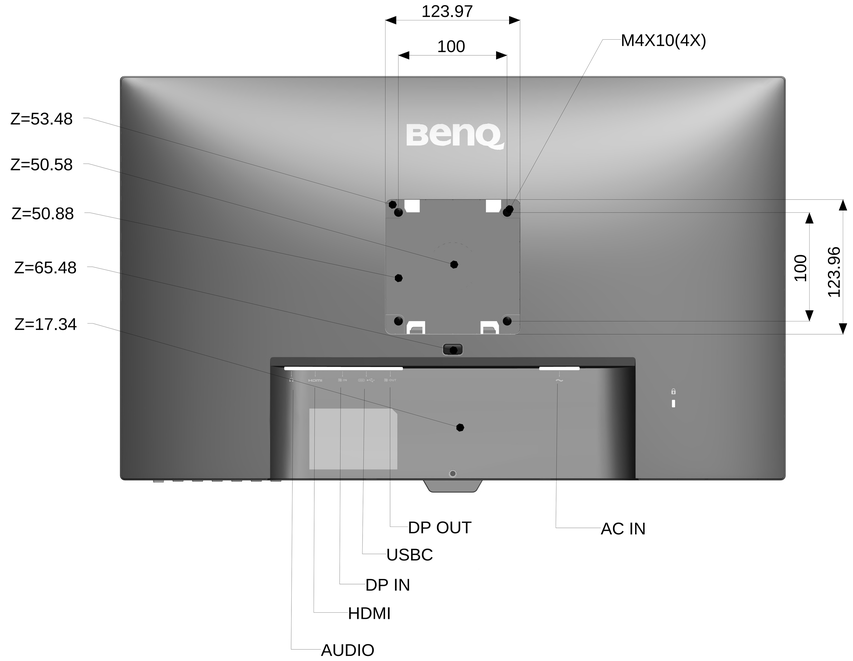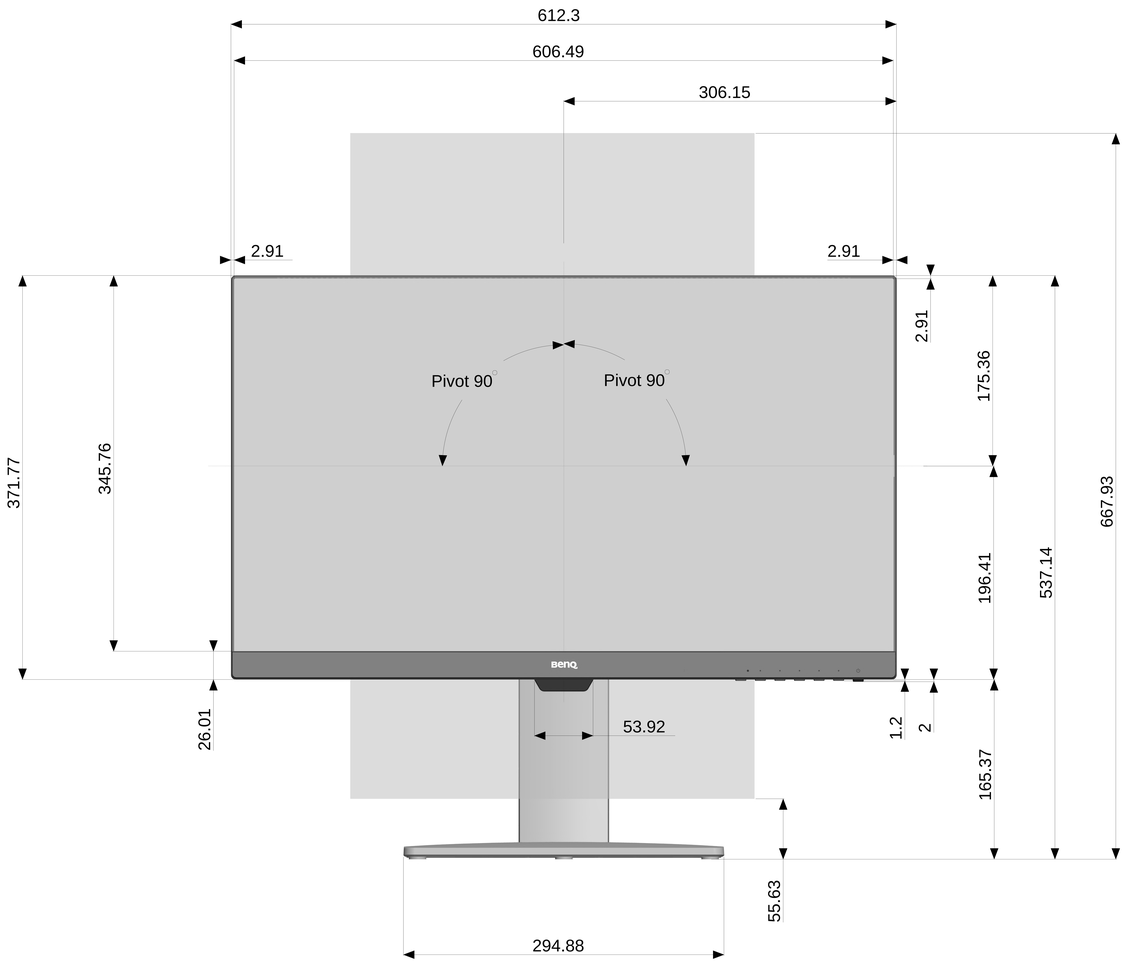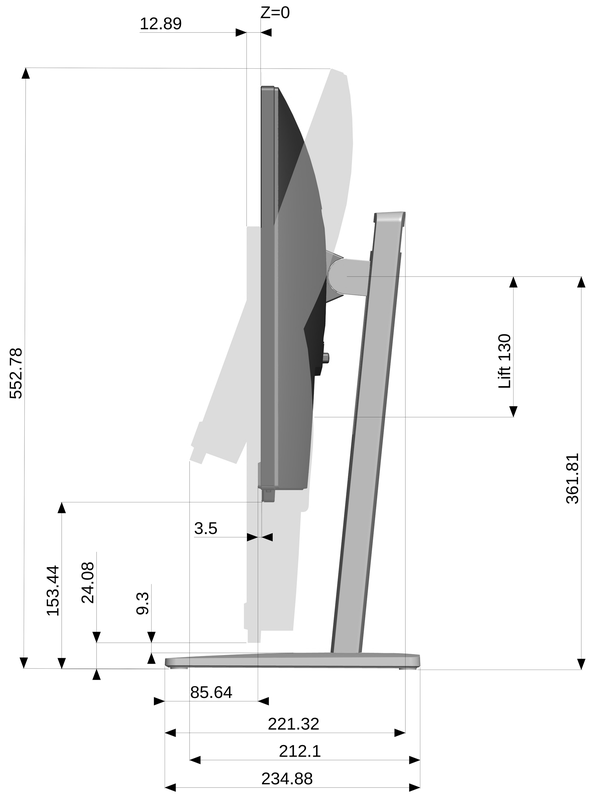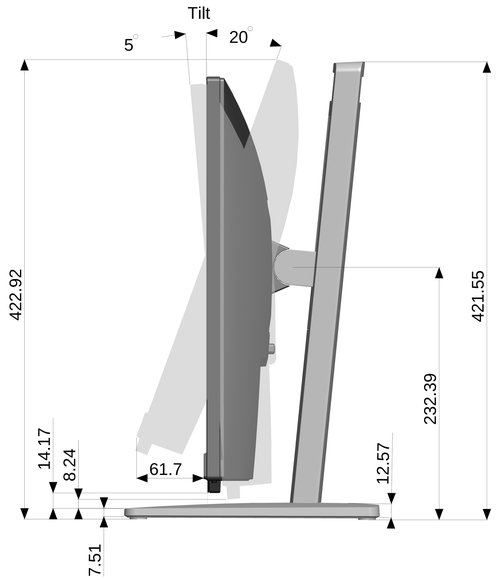BENQ MODEL NAME GW2785TC_BL2785TC
Unit: mm
Dimension: Norminal
Drawing: Not to Scale